NATIONAL UNIVERSITY OF TECHNOLOGY ISLAMABAD

DEPARTMENT OF COMPUTER SCIENCE

DIGITAL LOGIC DESIGN LAB

Name	**Bisma Fatima**
Roll No	**36**
Batch	**24**
Section	**A**
Lab Number	**07**
Instructor Name	**Sir Haseeb** **Miss Tehreem**
Date of Submission	**May 5, 2025, 2025**
Topic Covered	**BCD-to- seven segment display**

Experiment 8

BCD-TO- SEVEN SEGMENT DISPLAY

Objective

- To design, implement, and test a BCD to seven-segment display decoder that takes a 4-bit binary-coded decimal (BCD) input and correctly drives a seven-segment display to represent decimal digits (0–9).

Tools/Equipment Requirement

- Logic gate ICs as required
- 7447 DECODER and seven segment display
- 360 Ω - current limiting resistors
- Digital Electronics trainer.

Theoretical Explanation

The conversion from one code to another is common in digital systems. Sometimes the output of a system is used as the input to the other system. A conversion circuit is necessary between 2 systems if each system uses different codes for the same information.

BCD-to-seven Segment converter:

A light emitting Diode (LED) is a PN junction diode. When the diode is forward biased, a current flows through the junction and the light is emitted. See Fig.2.

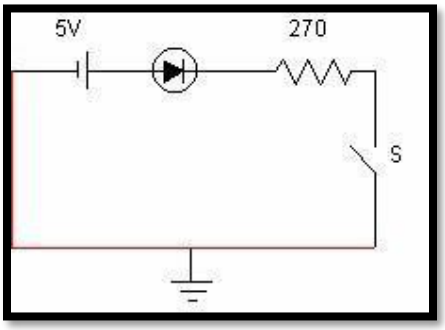

Figure.1

A seven segment LED display contains 7 LEDs. Each LED is called a segment and they are identified as (a, b, c, d, e, f, g) segments. Figure 3.

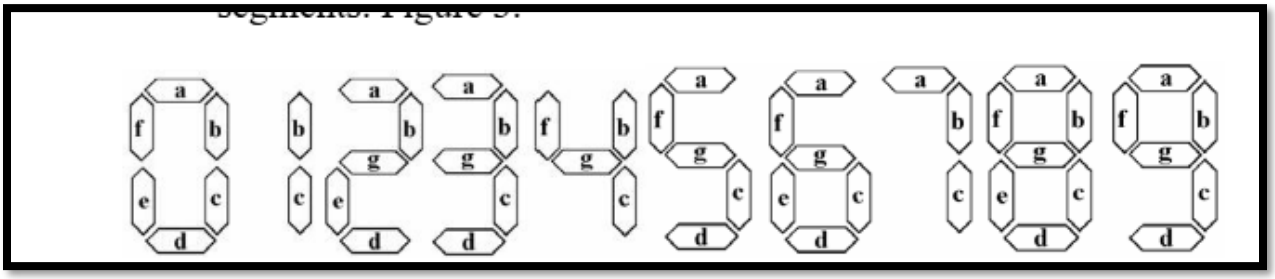

Figure 2. Digits represented by the 7 segments

The display has 7 inputs each connected to an LED segment. All anodes of LEDs are tied together and joined to 5 volts (this type is called common anode type). A limiting resistance network must be used at the inputs to protect the 7- segment from overloading.

BCD inputs are converted into 7 segment inputs (a, b, c, d, e, f, g) by using a decoder, as shown in Fig.4.

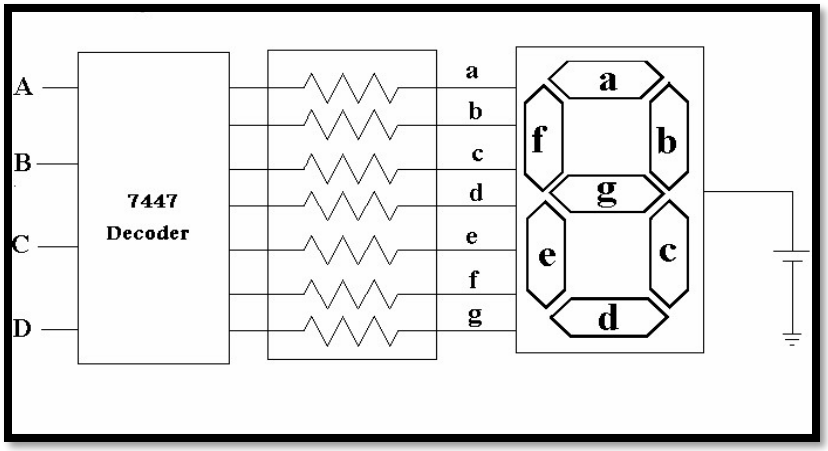

Figure. 3

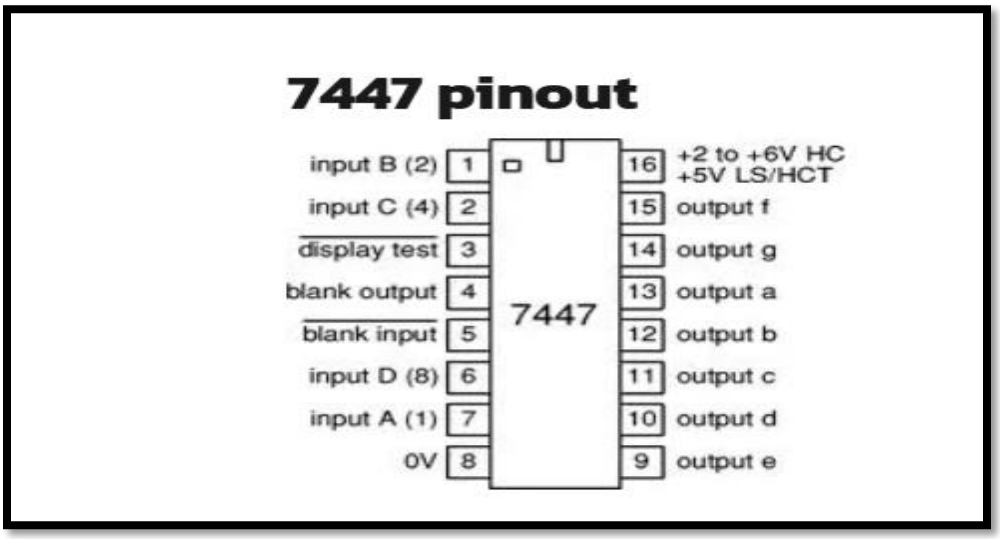

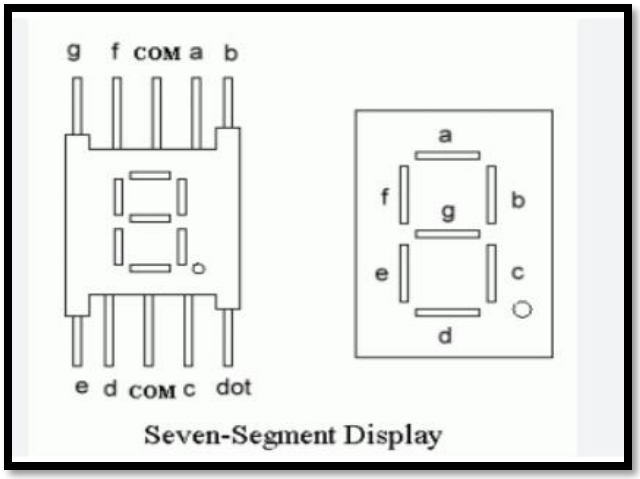

Figure.4

Lab Task

Procedure

Using 7447 Decoder IC

1. **Make all the connections for 7447 as given in the figure.4 above.**

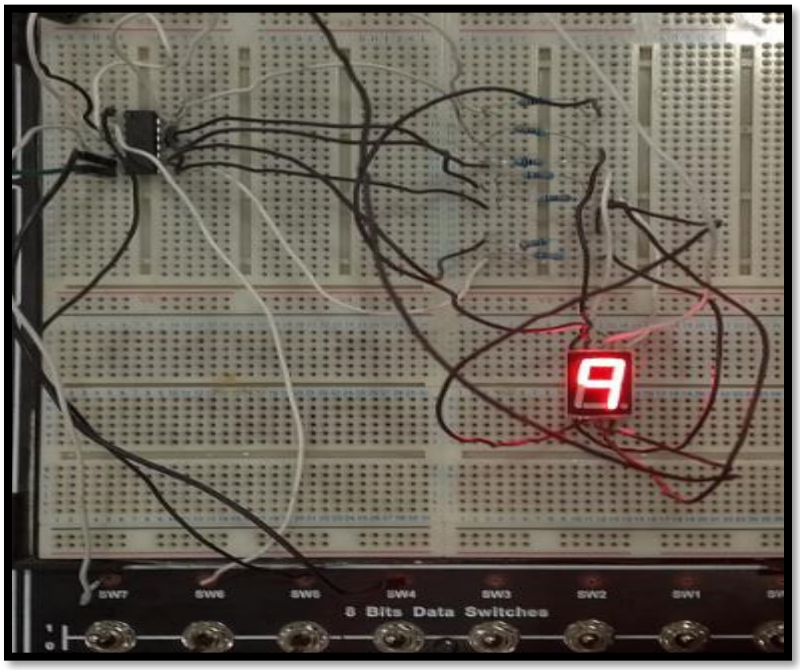

EXPLAINATION :

- The circuit is powered by the K&H ETS-7000A system.
- +5V and ground lines are connected to the breadboard via red and white wires.
- The 7447 BCD-to-7-segment decoder IC is used.
- Input is received from switches SW0-SW3, currently set to 1001 (representing the number 9).
- The IC's outputs are connected to the 7-segment display through resistors for current limiting and LED protection.
- The 7-segment display is a common-anode type, lighting up when segments are pulled low.
- The display shows the digit '9' based on the input.

2. Verify its operation by applying

If we want to display all the numbers we can use combination of turning ON and OFF the input. Now if want to display 6 we have to place input where it forms 6 :

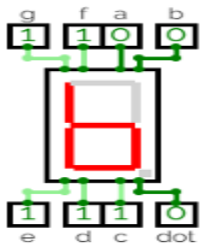

3. **Record the results in table.**

Dec.	BCD				Outputs						
	A	B	C	D	a	b	c	d	e	f	g
0	0	0	0	0	1	1	1	1	1	1	0
1	0	0	0	1	0	1	1	0	0	0	0
2	0	0	0	0	1	1	0	1	1	0	0
3	0	0	1	1	1	1	1	1	0	0	1
4	0	1	0	0	0	1	1	0	0	1	1
5	0	1	0	1	1	0	1	1	0	1	1
6	0	1	1	0	0	0	1	1	1	1	1
7	0	1	1	1	1	1	1	0	0	0	0
8	1	0	0	0	1	1	1	1	1	1	1
9	1	0	0	1	1	1	1	0	0	1	1

Post Lab Task

Using Logic gates

2. After completing the truth table, make K-maps for each of the seven outputs. Reduce the K-maps to obtain a minimal sum of products expression for each segment.

K-Map for each 7 segments (a,b,c,d,e,f,g)

- **K-Map for "a":**
-

AB\CD	***C'D'**(00)*	***C'D** (01)*	***CD**(11)*	***CD'**(10)*
***A'B'** (00)*	**1**	**0**	**1**	**1**
***A'B** (01)*	**0**	**1**	**1**	**0**
***AB** (11)*	**X**	**X**	**X**	**X**
***AB'** (10)*	**1**	**1**	**X**	**X**

⇨ **Here x denotes "don't care terms"**

SIMPLIFIED EXPRESSION FOR 'a':
a=AB'C'+A'BD+A'B'C+B'C'D'

- **K-Map for "b":**

AB\CD	***C'D'**(00)*	***C'D** (01)*	***CD**(11)*	***CD'**(10)*
***A'B'** (00)*	1	1	1	1
***A'B** (01)*	1	0	1	0
***AB** (11)*	x	x	X	x
***AB'** (10)*	1	1	x	x

⇨ **Here x denotes "don't care terms"**

SIMPLIFIED EXPRESSION FOR 'b':
b = A`B`+C`B`+A`C`D`+A`CD

- **K-Map for "c":**

AB\CD	***C'D'**(00)*	***C'D** (01)*	***CD**(11)*	***CD'**(10)*
***A'B'** (00)*	1	1	1	0
***A'B** (01)*	1	1	1	1
***AB** (11)*	X	X	x	X
***AB'** (10)*	1	1	x	x

⇨ **Here x denotes "don't care terms"**

SIMPLIFIED EXPRESSION FOR 'c':
c =A`B+A`D+B`C`

- **K-Map for "d":**

AB\CD	***C'D'(00)***	***C'D (01)***	***CD(11)***	***CD'(10)***
A'B' (00)	1	0	1	1
A'B (01)	0	1	0	1
AB (11)	X	x	x	x
AB' (10)	1	0	x	x

⇨ **Here x denotes "don't care terms"**

SIMPLIFIED EXPRESSION FOR 'd':
d = B`C`D`+A`B`C+A`CD`+A`BC`D`

- **K-Map for "e":**

AB\CD	***C'D'(00)***	***C'D (01)***	***CD(11)***	***CD'(10)***
A'B' (00)	1	0	0	1
A'B (01)	0	0	0	1
AB (11)	X	X	x	X
AB' (10)	1	0	x	x

⇨ **Here x denotes "don't care terms"**

SIMPLIFIED EXPRESSION FOR 'e':
e= B`C`D`+A`CD`

- **K-Map for "f":**

AB\CD	***C'D'(00)***	***C'D (01)***	***CD(11)***	***CD'(10)***
A'B' (00)	1	0	0	0
A'B (01)	1	1	0	1
AB (11)	x	x	x	x

AB' *(10)*	1	1	x	x

⇨ **Here x denotes "don't care terms"**

SIMPLIFIED EXPRESSION FOR 'f':
f=A`C`D`+A`BD`+AB`C`+A'BC'

- **K-Map for "g":**

AB\CD	***C'D'****(00)*	***C'D*** *(01)*	***CD****(11)*	***CD'****(10)*
A'B' *(00)*	0	0	1	1
A'B *(01)*	1	1	0	1
AB *(11)*	x	x	x	x
AB' *(10)*	1	1	x	x

⇨ **Here x denotes "don't care terms"**

SIMPLIFIED EXPRESSION FOR 'g':
g = A`BC`+A`B`C+A`CD`+AB`

4. **For each K-map, draw the gate level circuits that the equation represents. Note: Use AND gates and OR gates as required for a two level implementation.**

Logical diagram for each 7 segments (a,b,c,d,e,f,g)

- **Circuit diagram for 'a':**

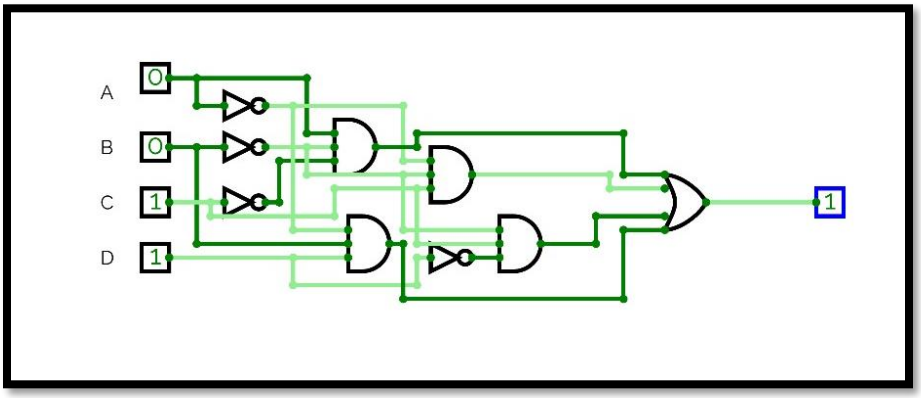

- Circuit diagram for 'b':

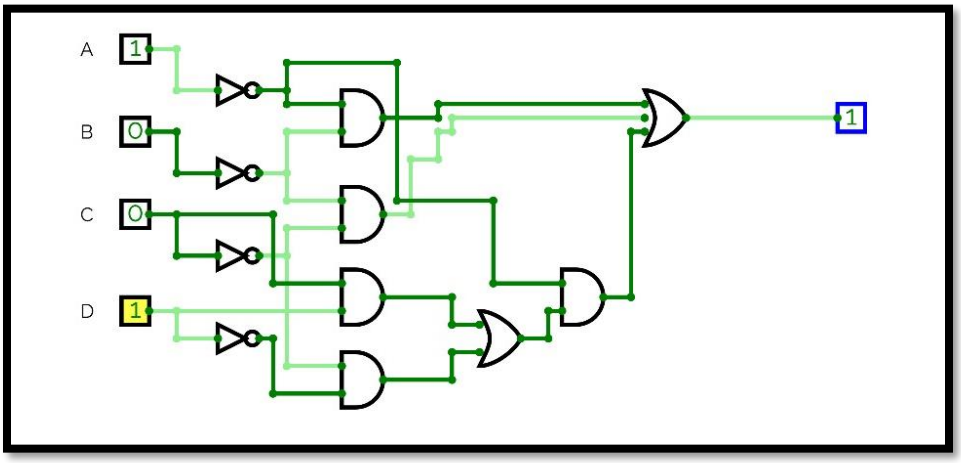

- Circuit diagram for ‘c’:

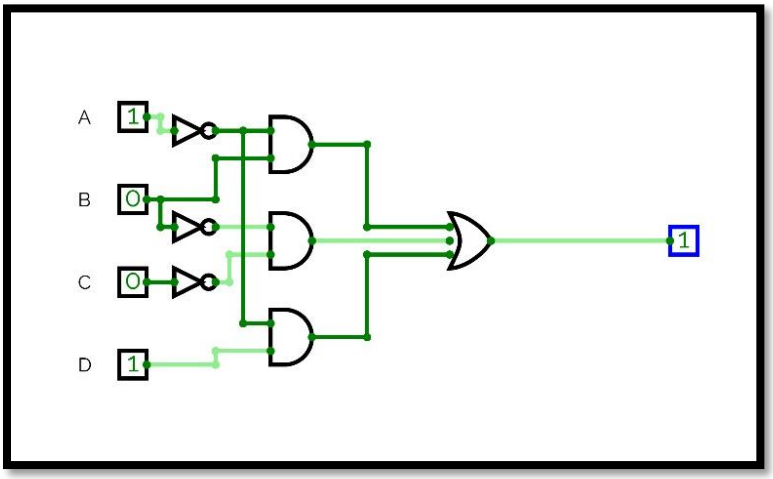

- Circuit diagram for ‘d’:

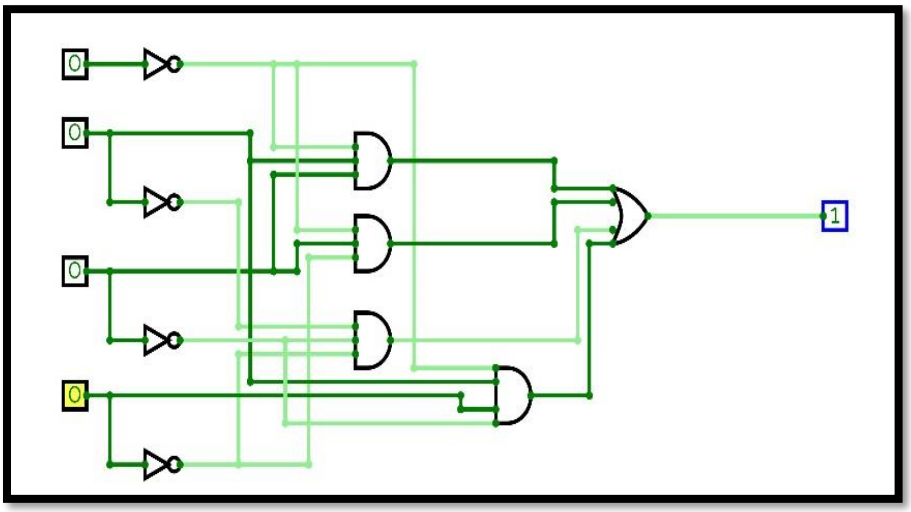

- Circuit diagram for ‘e’:

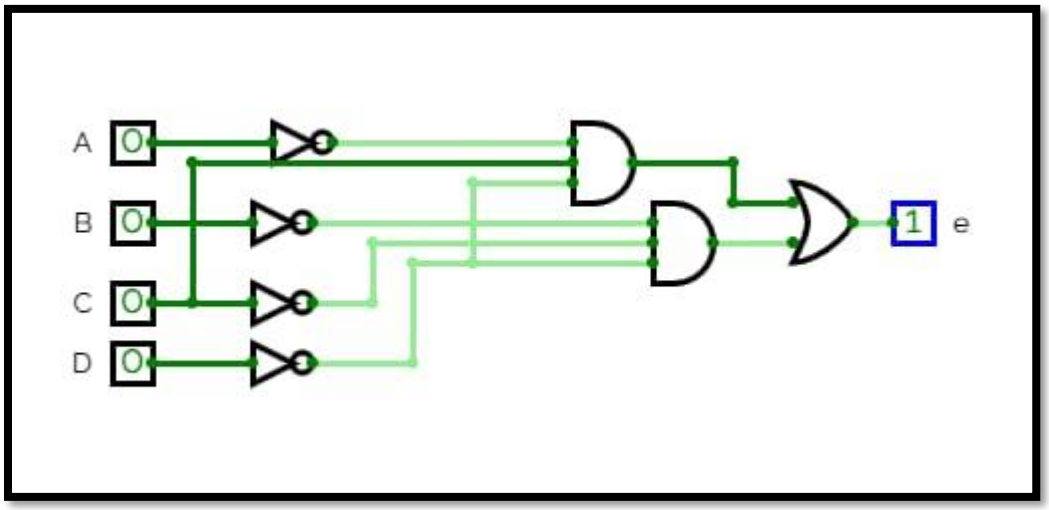

- Circuit diagram for ‘f’:

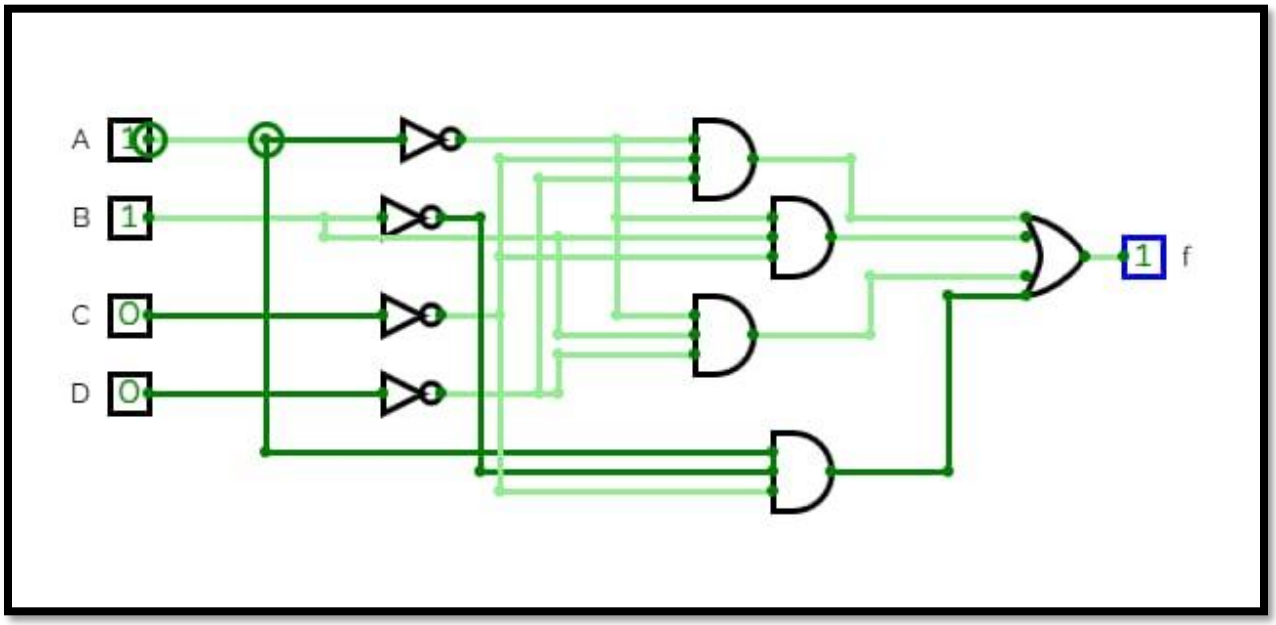

- Circuit diagram for ‘g’:

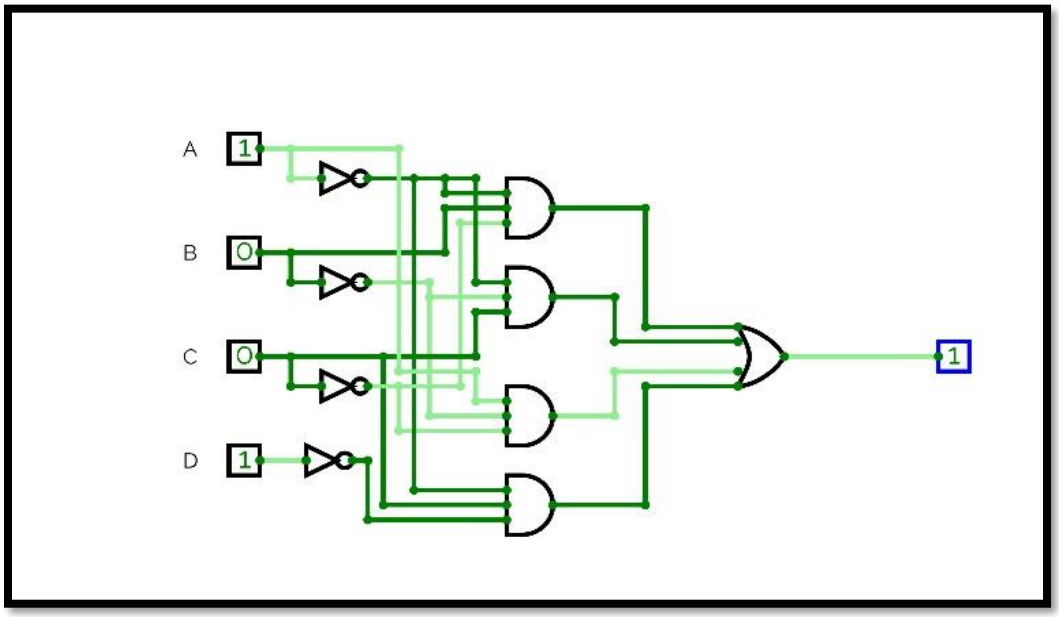

Learning Outcomes:

- Students gain practical experience with digital circuits by building a BCD-to-7-segment decoder.
- The 7447 decoder is used to convert 4-bit BCD code into 7-segment display signals.
- Students learn circuit assembly, testing, and troubleshooting using resistors and LED displays.
- This hands-on activity develops skills in digital electronics, component handling, and logic understanding.
- Students deepen their knowledge of digital data representation and conversion processes.